EVOline

ДЕТАЛИРОВКА ПЫЛЕВОДОСОС WAD 150

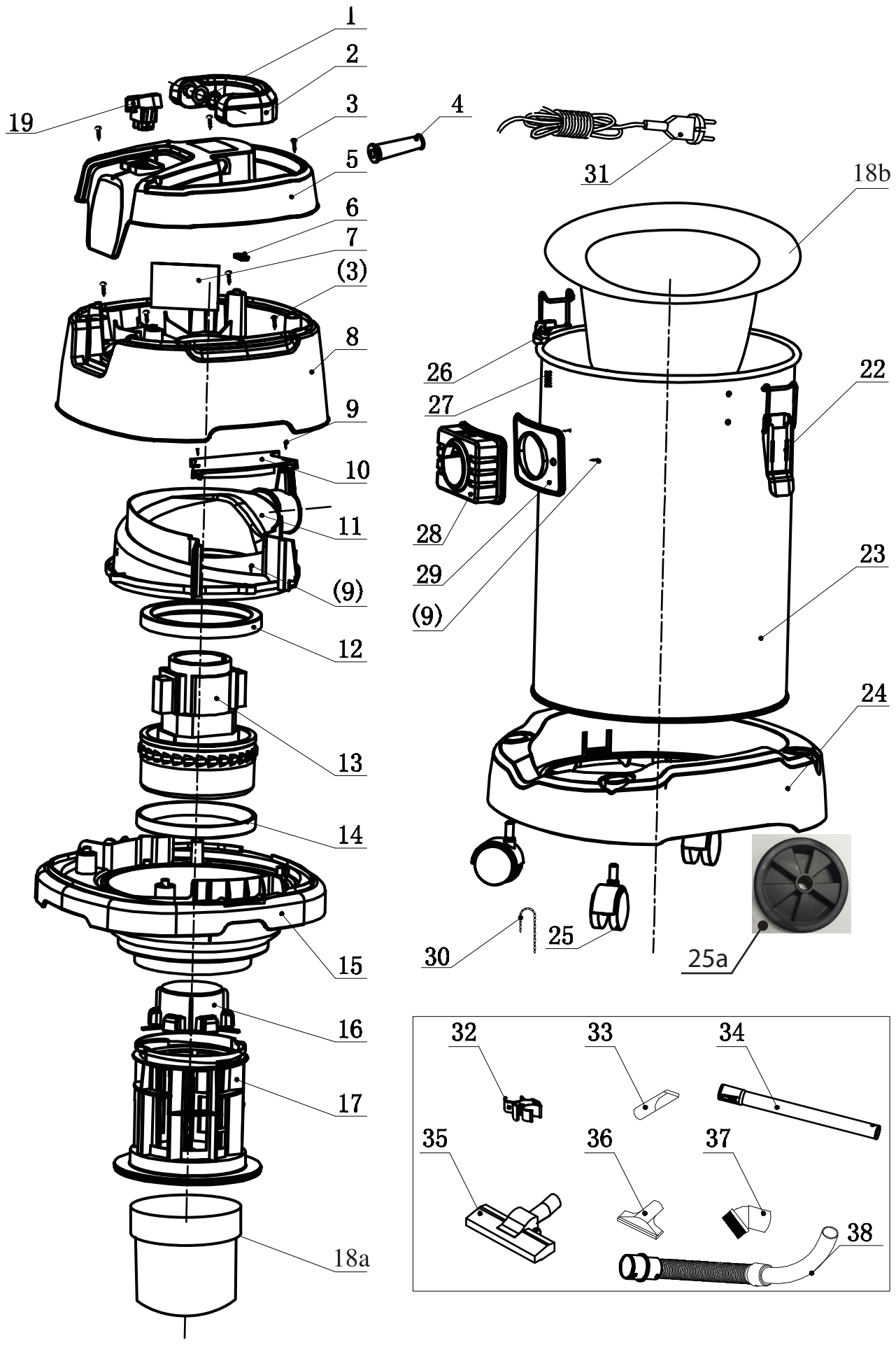

№	Артикул	Наименование	Кол-во
1	60354EVO	Sealing ring	2
2	60355EVO	Handle	1
3	60356EVO	Screw ST4X20	8
4	60357EVO	Sleeve	1
5	60358EVO	Top cover	1
6	60359EVO	Tension disc	1
7	60312EVO	Circuit board	1
8	60360EVO	Middle cover	1
9	60361EVO	Screw ST4X 10	6
10	60362EVO	Air duct cover	1
11	60363EVO	Motor cover	1
12	60313EVO	Sealing ring	2
13	60326EVO	Motor 220v 1400W	1
14	60314EVO	Sealing ring	1
15	60373EVO	Bottom cover	1
16	60365EVO	Safety valve	1
17	60366EVO	Bottom basket	1
18a	60320EVO	Sponge filter	1
18b	60322EVO	Cotton filter	1
19	60311EVO	Switch	1
22	60328EVO	Hasp	1
23	60375EVO	Tank	1
24	60337EVO	Pedestal	1
25	60336EVO	Small wheels	2
25a	60335EVO	Main wheel	2
26	60329EVO	Button	1
27	60330EVO	Spring	1
28	60331EVO	Air inlet	1
29	60332EVO	Sealing ring	1
30	60368EVO	Chain	1
31	60369EVO	Power line	1
32	60339EVO	rack	1
33	60318EVO	Crevice tools	1
34	60350EVO	Metal tubes d32	1
35	60317EVO	Plastic brush	1
36	60371EVO	Sofa brush	1
37	60319EVO	Round brush	1
38	60315EVO	Tube 2.5m d32	1
39	60338EVO	Drain hose	1